Cambridge International AS & A Level

Cambridge International Examinations
Cambridge International Advanced Subsidiary and Advanced Level

PHYSICS **9702/12**

Paper 1 Multiple Choice **February/March 2016**

1 hour 15 minutes

Additional Materials: Multiple Choice Answer Sheet
Soft clean eraser
Soft pencil (type B or HB is recommended)

4633464165

READ THESE INSTRUCTIONS FIRST

Write in soft pencil.
Do not use staples, paper clips, glue or correction fluid.
Write your name, Centre number and candidate number on the Answer Sheet in the spaces provided unless this has been done for you.
DO **NOT** WRITE IN ANY BARCODES.

There are **forty** questions on this paper. Answer **all** questions. For each question there are four possible answers **A**, **B**, **C** and **D**.
Choose the **one** you consider correct and record your choice in **soft pencil** on the separate Answer Sheet.

Read the instructions on the Answer Sheet very carefully.

Each correct answer will score one mark. A mark will not be deducted for a wrong answer.
Any working should be done in this booklet.
Electronic calculators may be used.

This document consists of **17** printed pages and **3** blank pages.

© UCLES 2016

Data

speed of light in free space	$c = 3.00 \times 10^{8}\,\text{m s}^{-1}$
permeability of free space	$\mu_0 = 4\pi \times 10^{-7}\,\text{H m}^{-1}$
permittivity of free space	$\varepsilon_0 = 8.85 \times 10^{-12}\,\text{F m}^{-1}$
	$(\frac{1}{4\pi\varepsilon_0} = 8.99 \times 10^{9}\,\text{m F}^{-1})$
elementary charge	$e = 1.60 \times 10^{-19}\,\text{C}$
the Planck constant	$h = 6.63 \times 10^{-34}\,\text{J s}$
unified atomic mass unit	$1\,\text{u} = 1.66 \times 10^{-27}\,\text{kg}$
rest mass of electron	$m_\text{e} = 9.11 \times 10^{-31}\,\text{kg}$
rest mass of proton	$m_\text{p} = 1.67 \times 10^{-27}\,\text{kg}$
molar gas constant	$R = 8.31\,\text{J K}^{-1}\,\text{mol}^{-1}$
the Avogadro constant	$N_\text{A} = 6.02 \times 10^{23}\,\text{mol}^{-1}$
the Boltzmann constant	$k = 1.38 \times 10^{-23}\,\text{J K}^{-1}$
gravitational constant	$G = 6.67 \times 10^{-11}\,\text{N m}^2\,\text{kg}^{-2}$
acceleration of free fall	$g = 9.81\,\text{m s}^{-2}$

© UCLES 2016

Formulae

uniformly accelerated motion	$s = ut + \frac{1}{2}at^2$ $v^2 = u^2 + 2as$
work done on/by a gas	$W = p\Delta V$
gravitational potential	$\phi = -\frac{Gm}{r}$
hydrostatic pressure	$p = \rho gh$
pressure of an ideal gas	$p = \frac{1}{3}\frac{Nm}{V}\langle c^2 \rangle$
simple harmonic motion	$a = -\omega^2 x$
velocity of particle in s.h.m.	$v = v_0 \cos \omega t$ $v = \pm\omega\sqrt{(x_0^2 - x^2)}$
Doppler effect	$f_o = \frac{f_s v}{v \pm v_s}$
electric potential	$V = \frac{Q}{4\pi\varepsilon_0 r}$
capacitors in series	$1/C = 1/C_1 + 1/C_2 + \ldots$
capacitors in parallel	$C = C_1 + C_2 + \ldots$
energy of charged capacitor	$W = \frac{1}{2}QV$
electric current	$I = Anvq$
resistors in series	$R = R_1 + R_2 + \ldots$
resistors in parallel	$1/R = 1/R_1 + 1/R_2 + \ldots$
Hall voltage	$V_H = \frac{BI}{ntq}$
alternating current/voltage	$x = x_0 \sin \omega t$
radioactive decay	$x = x_0 \exp(-\lambda t)$
decay constant	$\lambda = \frac{0.693}{t_{\frac{1}{2}}}$

© UCLES 2016

[Turn over

1 The prefixes nano (n), micro (μ) and pico (p) are often used with units.

Which row shows their correct values?

	n	μ	p
A	10^{-6}	10^{-9}	10^{-12}
B	10^{-6}	10^{-12}	10^{-9}
C	10^{-9}	10^{-6}	10^{-12}
D	10^{-12}	10^{-9}	10^{-6}

2 A crane has an arm to which is attached a frictionless pulley. A cable passes over the pulley and supports a load of 10 kN as shown.

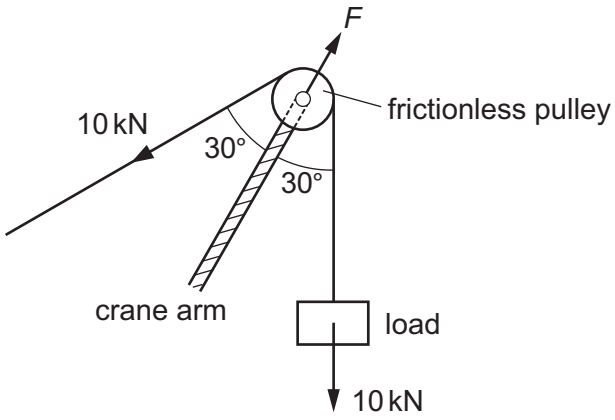

The crane arm exerts a force *F* on the pulley.

What is the value of *F*?

A 5.0 kN **B** 8.7 kN **C** 10 kN **D** 17 kN

3 The SI unit of specific heat capacity is $\mathrm{J\,kg^{-1}\,K^{-1}}$.

What is the unit of specific heat capacity expressed in SI base units?

A $\mathrm{m\,s^{-2}\,K^{-1}}$ **B** $\mathrm{kg\,m\,s^{-1}\,K^{-1}}$ **C** $\mathrm{m^2\,s^{-2}\,K^{-1}}$ **D** $\mathrm{kg\,m^2\,s^{-1}\,K^{-1}}$

4 Quantity *X* has a fractional uncertainty of *x*. Quantity *Y* has a fractional uncertainty of *y*.

What is the fractional uncertainty in $\frac{X}{Y^2}$?

A $x + y$ **B** $x - y$ **C** $x + 2y$ **D** $x - 2y$

© UCLES 2016

5 PQR and XYZ are wires in a circuit. A galvanometer connects Q and Y as a null indicator.

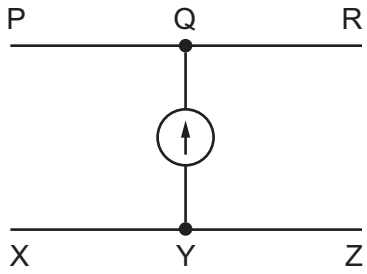

When the galvanometer reads zero, which statement is correct?

A The potential difference between Q and Y is infinite.

B The potential difference between Q and Y is zero.

C The resistance between Q and Y is infinite.

D The resistance between Q and Y is zero.

6 An object has an initial velocity u and an acceleration a. The object moves in a straight line through a displacement s and has final velocity v.

The above quantities are related by the equation shown.

$$v^2 = u^2 + 2as$$

Which condition **must** be satisfied in order for this equation to apply to the motion of the object?

A The direction of a is constant and the direction of a is the same as the direction of s.

B The direction of a is constant and the direction of a is the same as the direction of u.

C The magnitude of a is constant and the direction of a is constant.

D The magnitude of a is constant and the direction of a is the same as the direction of v.

7 A car is travelling at constant velocity. Its brakes are then applied, causing uniform deceleration.

Which graph shows the variation with distance s of the velocity v of the car?

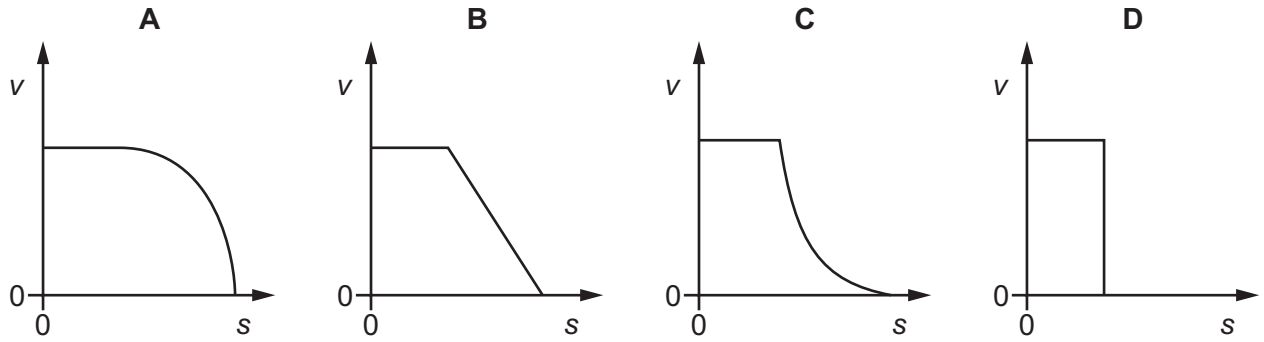

8 A ball is thrown across a flat field.

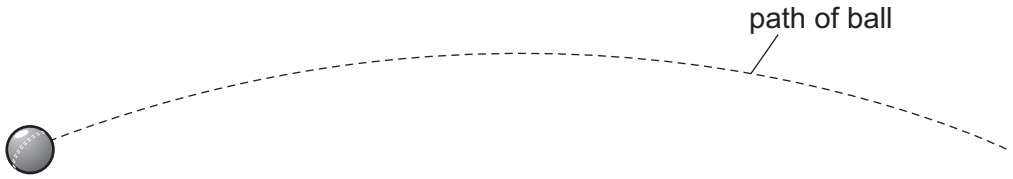

Which statement describes the motion of the ball, when the effects of air resistance are ignored?

A The ball lands with the same velocity at which it is thrown.

B The horizontal component of acceleration is constant throughout the motion.

C The horizontal and vertical components of acceleration are both zero at the highest point of the motion.

D The horizontal and vertical components of velocity are both zero at the highest point of the motion.

9 Which statement **defines** force?

A When a force acts on a body that is free to move, the force is the product of the mass of the body and its acceleration.

B When a force acts on a body that is free to move, the force is the rate of change of momentum of the body.

C When a force acts on a body that is free to move, the force is the work done by the force divided by the distance moved by the body.

D When a force acts on a lever and causes a moment, the force is the moment divided by the perpendicular distance of the force from the pivot.

© UCLES 2016

10 A particle of mass m, travelling with speed u, collides with a stationary particle of mass M. The velocities of the two particles before and after the collision are shown.

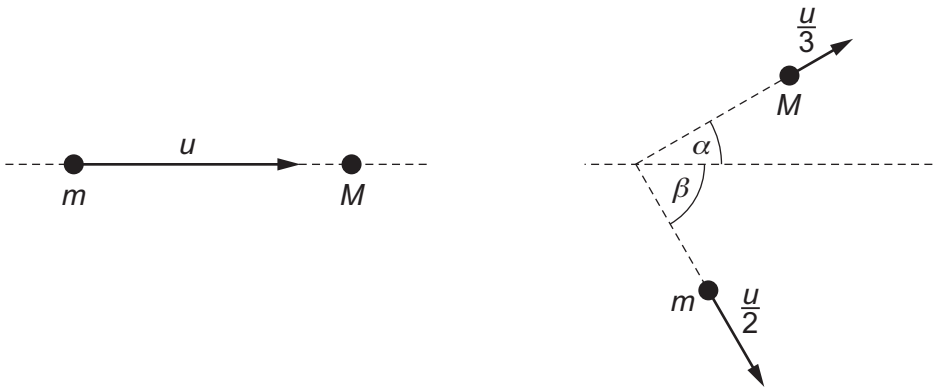

before collision after collision

Which vector diagram correctly shows the momenta before and after the collision?

A

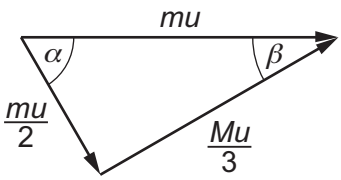

B

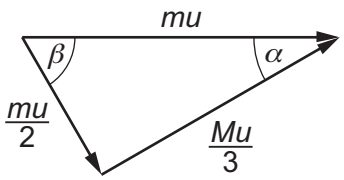

C

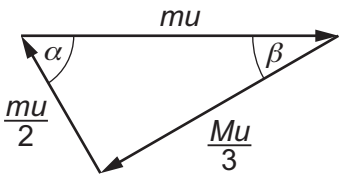

D

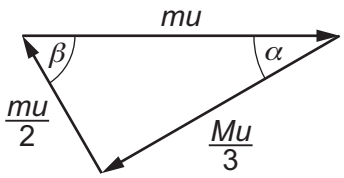

© UCLES 2016

11 An object falls freely from rest in a vacuum. The graph shows the variation with time t of the velocity v of the object.

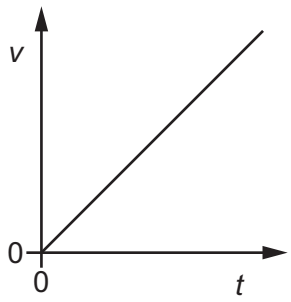

Which graph, using the same scales, represents the object falling in air?

A

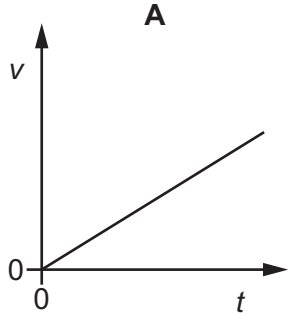

B

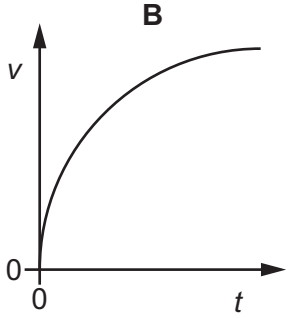

C

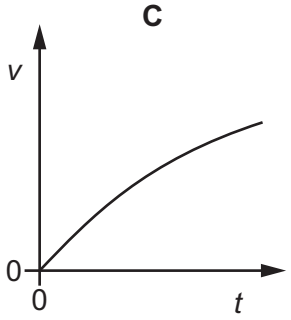

D

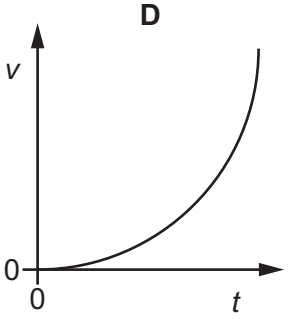

12 The diagram shows a uniform beam PQ. The length of the beam is 3.0 m and its weight is 50 N. The beam is supported on a pivot 1.0 m from end P. A load of weight W is hung from end P and the beam is in equilibrium.

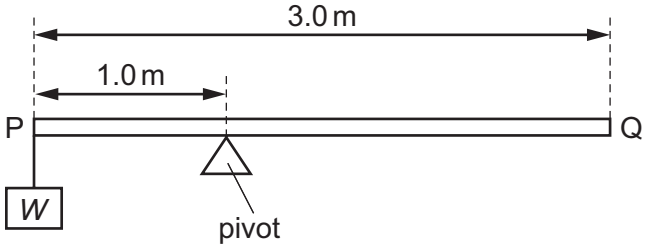

What is the value of W?

A 25 N **B** 50 N **C** 75 N **D** 100 N

© UCLES 2016

13 Two forces, each of magnitude *F*, act at points V and W on an object.

The two forces form a couple. The shape of the object is a right-angled triangle with sides of lengths *x* and *y*, as shown.

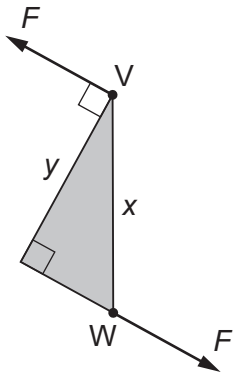

Which expression gives the torque exerted by the couple?

A Fx **B** Fy **C** $2Fx$ **D** $2Fy$

14 A giant squid of length 20.0 m is vertical in seawater, with the top of the squid at a depth of 8.00 m. The density of seawater is 1050 kg m^{-3}.

What is the difference in pressure between the top and the bottom of the squid?

A 82 000 Pa **B** 206 000 Pa **C** 288 000 Pa **D** 389 000 Pa

15 The force diagram shows an aircraft accelerating. At the instant shown, the velocity of the aircraft is 40 m s^{-1}.

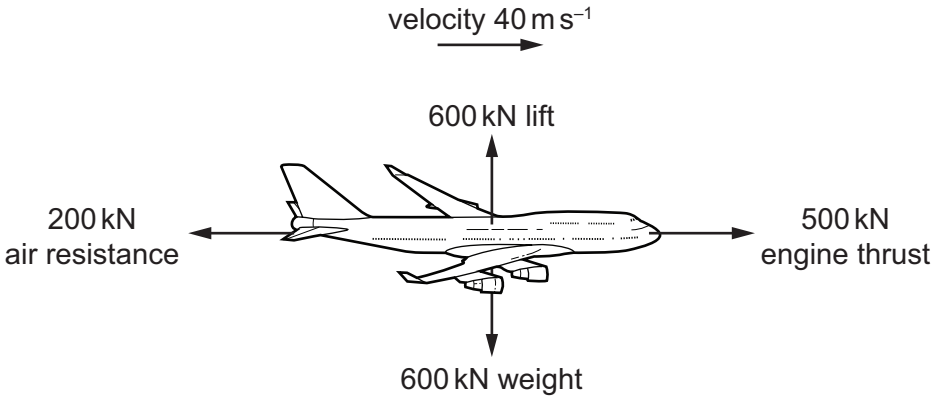

At which rate is its kinetic energy increasing?

A 2.4 MW **B** 8.0 MW **C** 12 MW **D** 20 MW

16 A man is running in a straight line.

What is an approximate value of his kinetic energy?

A 10 J **B** 100 J **C** 1000 J **D** 10 000 J

17 The pump of a water pumping system uses 2.0 kW of electrical power when raising water. The pumping system lifts 16 kg of water per second through a vertical height of 7.0 m.

What is the efficiency of the pumping system?

A 1.8% **B** 5.6% **C** 22% **D** 55%

18 A metal wire is stretched by a load. The force-extension graph is shown.

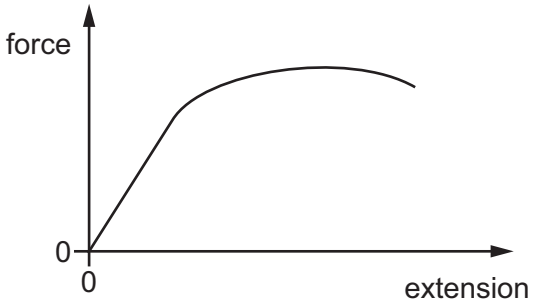

What is represented by the area under the whole graph?

A the change in gravitational potential energy of the wire

B the energy that would be released from the wire if the final load was removed

C the energy transferred into heat energy in the wire

D the work done in stretching the wire

19 The Young modulus of steel is twice that of copper.

A 50 cm length of copper wire of diameter 2.0 mm is joined to a 50 cm length of steel wire of diameter 1.0 mm, making a combination wire of length 1.0 m, as shown.

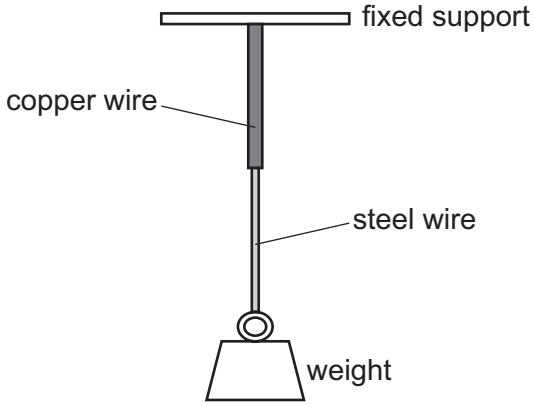

The combination wire is stretched by a weight added to its end. Both the copper and the steel wires obey Hooke's law.

What is the ratio $\frac{\text{extension of steel wire}}{\text{extension of copper wire}}$?

A 4 **B** 2 **C** 1 **D** 0.5

© UCLES 2016

20 With which types of wave can the Doppler shift be observed?

A all types of wave

B light and sound waves only

C sound waves and water waves only

D sound waves only

21 A distant star is receding from the Earth with a speed of $1.40 \times 10^7\,\text{m s}^{-1}$. It emits light of frequency $4.57 \times 10^{14}\,\text{Hz}$. The speed of light is $3.00 \times 10^8\,\text{m s}^{-1}$.

The Doppler effect formula can be used with light waves.

What will be the frequency of this light when detected on Earth?

A $2.04 \times 10^{13}\,\text{Hz}$

B $4.37 \times 10^{14}\,\text{Hz}$

C $4.57 \times 10^{14}\,\text{Hz}$

D $4.79 \times 10^{14}\,\text{Hz}$

22 The graph shows the variation with time of the displacement of two separate waves X and Y.

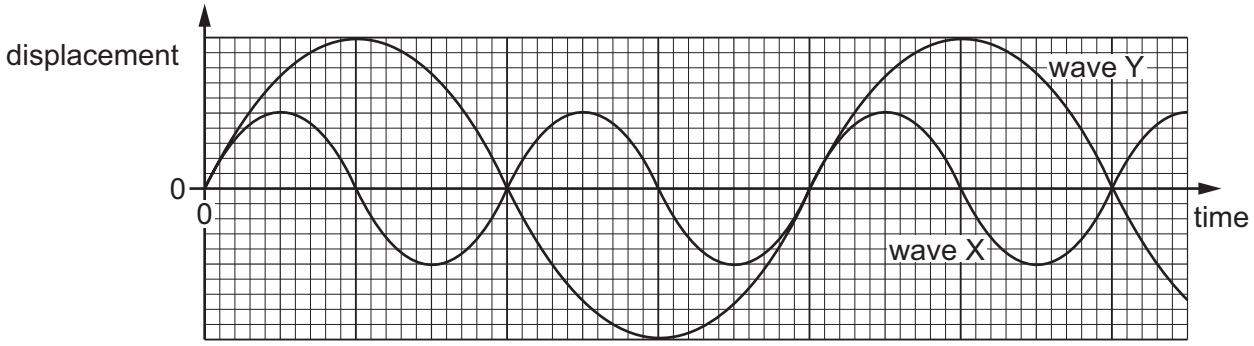

Wave X has frequency *f* and amplitude *A*.

What is the frequency and what is the amplitude of wave Y?

	frequency	amplitude
A	$\frac{1}{2}f$	$\frac{1}{2}A$
B	$\frac{1}{2}f$	$2A$
C	$2f$	$\frac{1}{2}A$
D	$2f$	$2A$

© UCLES 2016

[Turn over

23 Diffraction is a term used to describe one aspect of wave behaviour.

What does diffraction make possible?

A the ability to hear around corners

B the ability to hear high frequency and low frequency sound waves

C the ability to hear loud and quiet sounds

D the ability to hear sound through a brick wall

24 The diagram represents the pattern of stationary waves formed by the superposition of sound waves from a loudspeaker and their reflection from a metal sheet (not shown).

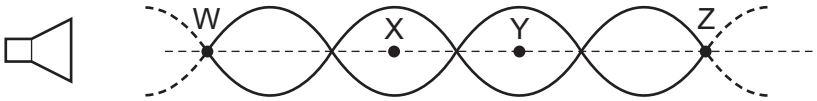

W, X, Y and Z are four points on the line through the centre of these waves.

Which statement about these stationary waves is correct?

A An antinode is formed at the surface of the metal sheet.

B A node is a quarter of a wavelength from an adjacent antinode.

C The oscillations at X are in phase with those at Y.

D The air particles oscillate perpendicular to the line WZ.

25 A musical instrument called a bugle is a long tube with a mouthpiece at one end. The other end is open and flared, as shown.



A musician maintains stationary sound waves with a node at the mouthpiece and an antinode at the other end. The lowest frequency of sound that the bugle can produce is 92 Hz.

Which different frequencies of sound can be produced by the bugle?

A 92 Hz, 138 Hz, 184 Hz, 230 Hz, 276 Hz

B 92 Hz, 184 Hz, 276 Hz, 368 Hz, 460 Hz

C 92 Hz, 276 Hz, 460 Hz, 644 Hz, 828 Hz

D 92 Hz, 276 Hz, 828 Hz, 2484 Hz, 7452 Hz

26 Monochromatic light of wavelength 5.30×10^{-7} m is incident normally on a diffraction grating. The first order maximum is observed at an angle of 15.4° to the direction of the incident light.

What is the angle between the first and second order diffraction maxima?

A 7.7° **B** 15.4° **C** 16.7° **D** 32.1°

© UCLES 2016

27 The diagram shows an electron in a uniform electric field.

In which direction will the field accelerate the electron?

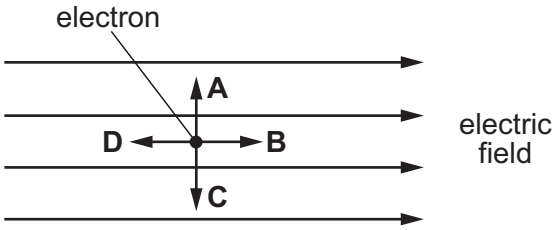

28 The electric field strength at a certain distance from an isolated alpha particle is $3.0 \times 10^{7}\,\text{N C}^{-1}$.

What is the force on an electron when at that distance from the alpha particle?

A $4.8 \times 10^{-12}\,\text{N}$

B $9.6 \times 10^{-12}\,\text{N}$

C $3.0 \times 10^{7}\,\text{N}$

D $6.0 \times 10^{7}\,\text{N}$

29 Two large parallel plates X and Y are placed a distance of 5.0 mm apart and connected to the terminals of a 200 V d.c. supply, as shown.

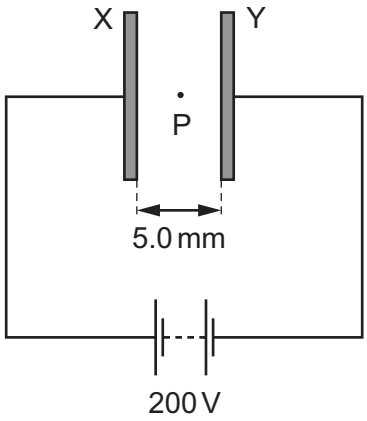

A small oil drop at P carries one excess electron.

What is the magnitude of the electrostatic force acting on the oil drop due to the electric field between the plates?

A $6.4 \times 10^{-15}\,\text{N}$

B $6.4 \times 10^{-18}\,\text{N}$

C $1.6 \times 10^{-19}\,\text{N}$

D $4.0 \times 10^{-24}\,\text{N}$

© UCLES 2016

30 An electrical conductor has a resistance of 5.6 kΩ. A potential difference (p.d.) of 9.0 V is applied across its ends.

How many electrons pass a point in the conductor in one minute?

A 6.0×10^{20} **B** 1.0×10^{19} **C** 6.0×10^{17} **D** 1.0×10^{16}

31 A fixed resistor of resistance 12 Ω is connected to a battery. There is a current of 0.20 A in the resistor. The current is now doubled.

What is the new power dissipated in the resistor?

A 0.48 W **B** 0.96 W **C** 1.92 W **D** 4.8 W

32 Which **measurements** are taken in order to calculate the resistivity of the metal of a piece of wire?

A p.d., current, area, length

B p.d., current, diameter, length

C resistance, area, length

D resistance, length, radius

33 A 12 V battery is charged for 20 minutes by connecting it to a source of electromotive force (e.m.f.). The battery is supplied with 7.2×10^4 J of energy in this time.

How much charge flows through the battery?

A 5.0 C **B** 60 C **C** 100 C **D** 6000 C

© UCLES 2016

34 Three cells with e.m.f.s V_1, V_2 and V_3, have negligible internal resistance. These cells are connected to three resistors with resistances R_1, R_2 and R_3, as shown.

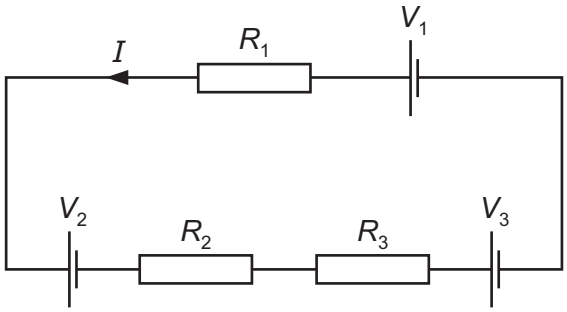

The current in the circuit is I.

Which equation is correct?

A $V_1 + V_2 + V_3 = I(R_1 + R_2 + R_3)$

B $V_1 + V_2 - V_3 = I(R_1 + R_2 + R_3)$

C $V_1 - V_2 + V_3 = I(R_1 + R_2 + R_3)$

D $V_1 - V_2 - V_3 = I(R_1 + R_2 + R_3)$

35 Three resistors, each of resistance R, are connected in a network, as shown.

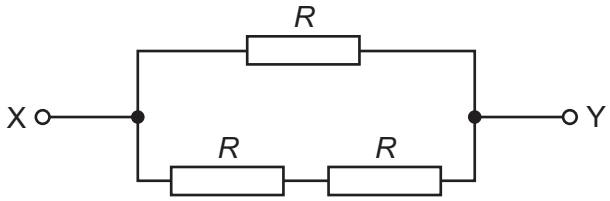

The total resistance between points X and Y is 8.0 Ω.

What is the value of R?

A 2.7 Ω **B** 4.0 Ω **C** 5.3 Ω **D** 12 Ω

36 In deriving a formula for the combined resistance of three different resistors in series, Kirchhoff's laws are used.

Which physics principle is involved in this derivation?

A the conservation of charge

B the direction of the flow of charge is from negative to positive

C the potential difference across each resistor is the same

D the current varies in each resistor, in proportion to the resistor value

© UCLES 2016

37 The battery of a car has an internal resistance of $0.10\,\Omega$ and an electromotive force of 12 V. When the battery is connected to the starter motor, the potential difference across the battery terminals is 7.0 V.

What is the current supplied to the starter motor?

A 50 A **B** 70 A **C** 120 A **D** 190 A

38 A sample of an isotope emits β^- particles.

The emitted β^- particles have a range of energies.

What must also be emitted?

A antineutrinos

B neutrinos

C antineutrons

D neutrons

39 A nucleus of magnesium decays into a nucleus of sodium by emitting a β^+ particle. The decay is represented by the equation shown.

$$^{23}_{12}\text{Mg} \rightarrow {}^{P}_{Q}\text{Na} + {}^{0}_{+1}\beta$$

What are the values of P and Q?

	P	Q
A	22	11
B	22	13
C	23	11
D	23	13

© UCLES 2016

40 Thorium-234 ($^{234}_{90}$Th) decays by β^- emission into a daughter product which in turn decays by a further β^- emission into a granddaughter product.

Which letter in the diagram represents the granddaughter product?

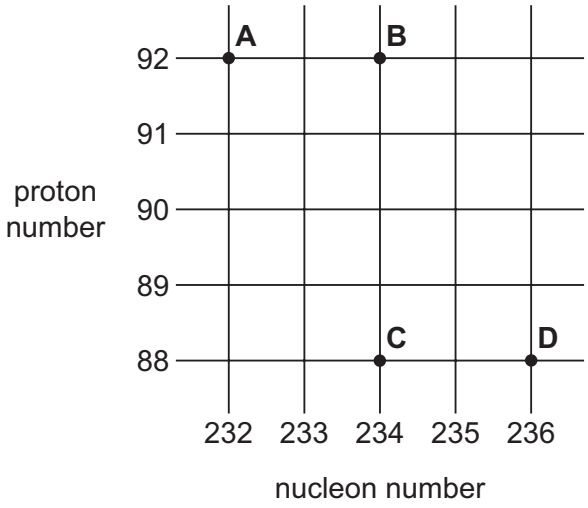

© UCLES 2016

BLANK PAGE

BLANK PAGE

BLANK PAGE

Permission to reproduce items where third-party owned material protected by copyright is included has been sought and cleared where possible. Every reasonable effort has been made by the publisher (UCLES) to trace copyright holders, but if any items requiring clearance have unwittingly been included, the publisher will be pleased to make amends at the earliest possible opportunity.

To avoid the issue of disclosure of answer-related information to candidates, all copyright acknowledgements are reproduced online in the Cambridge International Examinations Copyright Acknowledgements Booklet. This is produced for each series of examinations and is freely available to download at www.cie.org.uk after the live examination series.

Cambridge International Examinations is part of the Cambridge Assessment Group. Cambridge Assessment is the brand name of University of Cambridge Local Examinations Syndicate (UCLES), which is itself a department of the University of Cambridge.